ELC120-TB

Your satisfaction, Our priority.



TDP 250W+

ELC120

All-IN-ONE LIQUID CPU COOLER

Intel® LGA 2011 ready

AM3 AM3+ | AM2 AM2+ | FM1 | CORE i7 | CORE i5 | CORE i3

Features

- All-in-one liquid cooling system with prefilled coolant guarantees maintenance free benefit
- Patented Quad-Shunt-Channel (QSC) cold plate boosts thermal conductivity and eliminates any heat surge
- High performance Twister Bearing PWM fan with 3 cooling modes (800~1500/1800/2200 rpm) to suit your needs
- Ceramic bearing pump for longer life span and noiseless operation
- FEP tube ensures zero permeability and long-lasting reliability
- Easy-install smart bracket gives perfect contact force with CPU

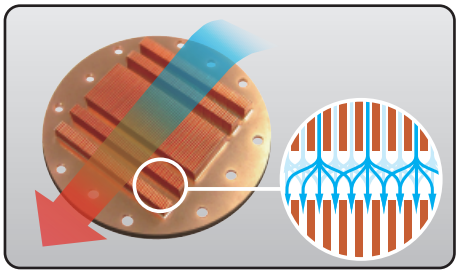

QSC technology cold plate (patented)

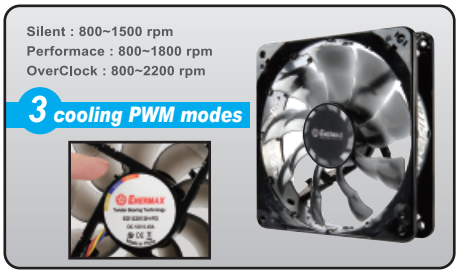

Twister bearing PWM fan (patented)

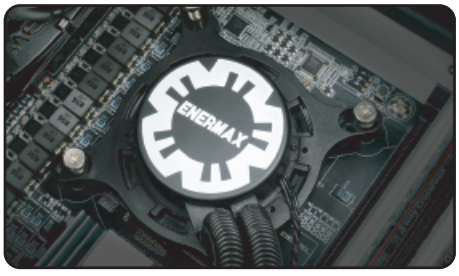

Easy-install smart bracket



Reliable FEP tube

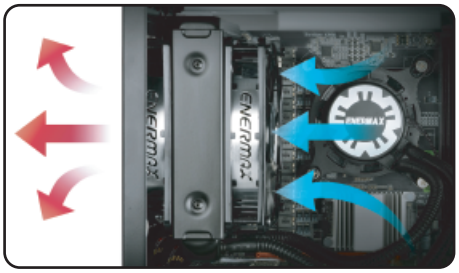

Application view

ENERMAX

ELC120-TB

Your satisfaction, Our priority.

Specifications

Cold Plate	Material	Copper
Pump	Bearing	Ceramic Bearing
	MTBF	50,000 hours
	Motor Speed	2200 rpm
	Rated Voltage	12 V
	Rated Current	0.45 A (Average 0.34 A)
Radiator	Dimension	151 x 120 x 32 mm
	Material	Aluminum
Tube	Material	FEP
	Length	315 mm
Weight (w/o fan)		495 g
Bracket	Compatibility	Intel® LGA 775/1155/1156/1366/2011, AMD® AM2/AM2+/AM3/AM3+/FM1
Fan	Dimension	120 x 120 x 25 mm
	Bearing	Twister Bearing
	MTBF	100,000 hours
	Speed	800 ~ 1500/1800/2200 rpm
	Rated Voltage	12V
	Rated Current	0.45 A (Average 0.25 A)
	Air Flow	37.6 ~ 71.3/86.7/105.9 CFM 63.9 ~ 121.1/147.3/180.0 m^3/h
	Static Pressure	0.7 ~ 1.7/2.4/3.6 mm-H_2O
	Noise Level	17.3 ~ 24.3/28.3/31.2 dBA
	Connector	4 pin PWM
Warranty		2 years

Test Report

CORE i7 920 @ 3.4GHZ - 100% LOAD

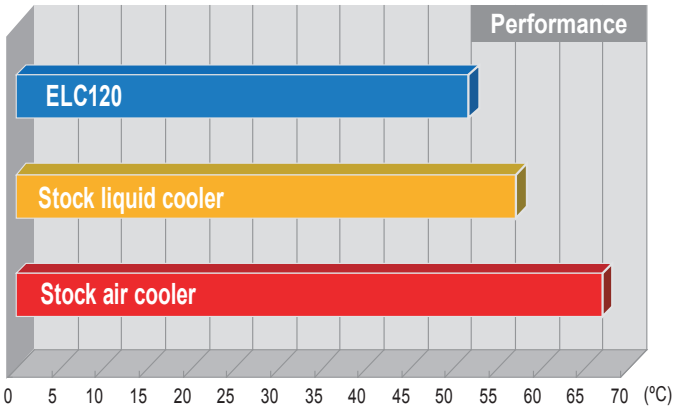

Dimension

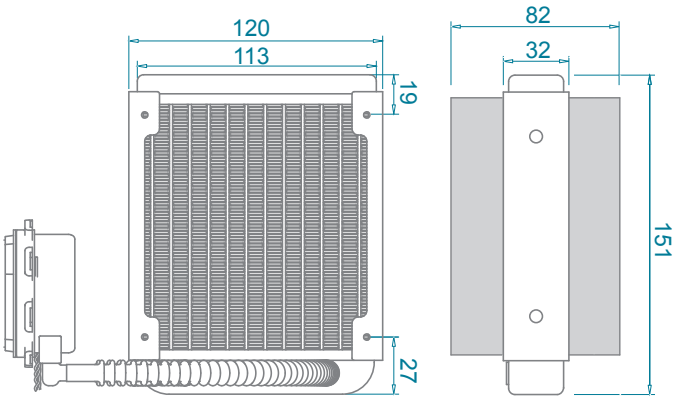

Unit: mm

Package Contents

Liquid CPU Cooler	x1
Fan	x2
AMD Bracket	x1
Intel Bracket	x1
Back Plate	x1
Back Plate Nut	x4
Bracket Screw	x4
Bracket Screw for Intel® LGA 2011	x4
Fan Screw	x8
Case Screw	x4
Installation Guide	x1

Z385 N4251

Made in China

ENERMAX

©2012 Enermax Technology Corporation. All rights reserved. All trademarks are the property of their respective owners. Images are for illustration purposes only.

SEP. 2012