Redundant Power Supply

EMA SERIES MINI REDUNDANT

550W/500W/460W/400W

Front AC inlet





FEATURE:

- Compliant with the latest SSI design guide & additional -5V output for full backwards compatibility
- Supports Hot-Swap / Hot-Plug redundant IPC, Workstation, Server, or Storage systems
- Integrated 3.3V & 5V per module and not per backplane for 100% redundancy
- Industry-leading octuple protection circuitry (AC UVP, DC UVP, OCP, OVP, OPP, OTP, SCP & SIP)
- Additional planar safety layer (DC UVP, OCP & OVP) on backplane-side after merging of outputs from each module
- Optimized thermal fan control for optimal cooling & noise performance
- Heavy-Duty Terminals 5.6A/pin enforced DIN 41612 connector for mission-critical systems
- Temperature range: Operating ambient 0℃~40℃; Storage ambient -40℃~70℃
- PSU status monitor with 4-mode LED (Off / Stand-by / OK / Fail) & acoustic buzzer
- Full-scale electromagnetic filtering protecting the system

ENERMAX

SYSTEM SPECIFICATIONS:

EMA SERIES

Power System Model		EMA2V4550		EMA2V4500		EMA2V4460		EMA2V4400	
Power Module		EMA550		EMA500		EMA460		EMA400	
Input Voltage (AC)		100-240V		100-240V		100-240V		100-240V	
Frequency		50-60Hz		50-60Hz		50-60Hz		50-60Hz	
Input Current		10-5A		8-4A		8-4A		6-3A	
DC Output	+3.3V	0-24A	180W	0-24A	180W	0-22A	220W	0-24A	150W
	+5V	0-30A		0-30A		0-35A		0-24A	
	+12V	0-41A	492W	0-36A	432W	0-30A	360W	0-30A	360W
	-5V	0-0.5A		0-0.5A		0-0.5A		0-0.5A	
	-12V	0-1A		0-1A		0-1A		0-1A	
	+5Vsb	0.1-2A		0.1-2A		0.1-2A		0.1-2A	
Total Output		550W		500W		460W		400W	
Dimensions (without bracket and power module handle)		150(W) * 85(H) * 199(D) mm							

Mechanical Drawing

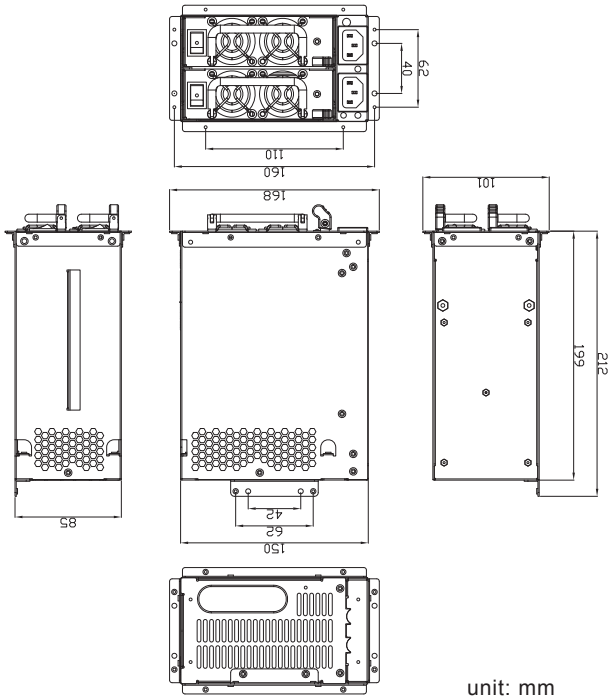

unit: mm

EMA SERIES
Front AC inlet

Power System Model		EMA2V4550F		EMA2V4500F		EMA2V4460F		EMA2V4400F	
Power Module		EMA550		EMA500		EMA460		EMA400	
Input Voltage (AC)		100-240V		100-240V		100-240V		100-240V	
Frequency		50-60Hz		50-60Hz		50-60Hz		50-60Hz	
Input Current		10-5A		8-4A		8-4A		6-3A	
DC Output	+3.3V	0-24A	180W	0-24A	180W	0-22A	220W	0-24A	150W
	+5V	0-30A		0-30A		0-35A		0-24A	
	+12V	0-41A	492W	0-36A	432W	0-30A	360W	0-30A	360W
	-5V	0-0.5A		0-0.5A		0-0.5A		0-0.5A	
	-12V	0-1A		0-1A		0-1A		0-1A	
	+5Vsb	0.1-2A		0.1-2A		0.1-2A		0.1-2A	
Total Output		550W		500W		460W		400W	
Dimensions (without bracket and power module handle)		150(W) * 85(H) * 199(D) mm							

Mechanical Drawing

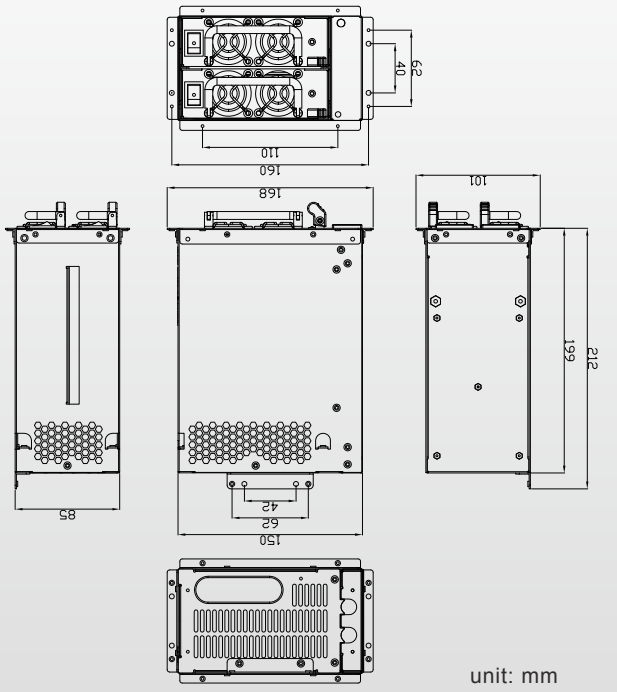

unit: mm