ETS-T40-White Cluster

Your satisfaction, Our priority.



ETS-T40-W

200W+ support



Intel® LGA 775/1150/1155/1156/1366/2011

AMD® AM2/AM2+/AM3/AM3+/FM1/FM2

Features

1. World leading thermal resistance performance of 0.085°C/W.
   - Unique TCC (Thermal Conductive Coating), to create better velocity of thermal transferring and to prevent oxidation on surface.
   - Patented VGF (Vortex generator flow), to increase air convection in-between the fins.
   - Patented SEF (Stack Effect), to enhance heat transferring bottom up.
   - Patented VEF (Vacuum Effect), to optimize airflow inside the cooler.
   - HDT (Heat-pipe Direct Touch), to improve thermal conductivity.
2. High performance PWM fan with smart APS (Adjustable Peak Speed) control providing 3 peak rpm options.
3. Extremely bright LED fan lights up the dark system.
4. Dual fan installed option.
5. Side flow type with four Ø6mm high performance heat pipes to improve heat transfer.
6. Universal bracket for Intel® LGA 775/1150/1155/1156/1366/2011 and AMD® AM2/AM2+/AM3/AM3+/FM1/FM2.
7. Anti-vibration rubbers prevent fan vibration and absorb noise.
8. High thermal conductivity grease to ensure the best thermal conduction between CPU and the heat sink.



Patented TCC/VGF/SEF/VEF design

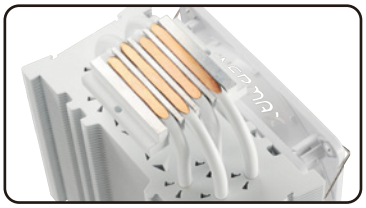

Patented HDT design
4 pcs of Ø6mm heat pipes

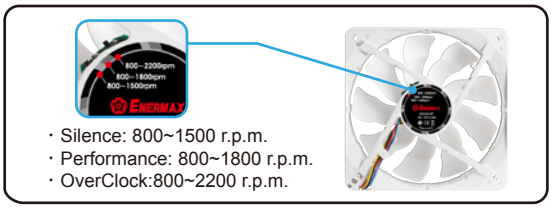

APS control (patented)

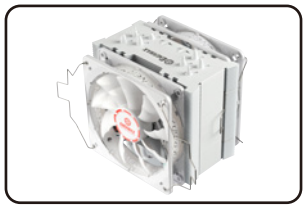

120mm dual fan installed option
Two sets of solid springs

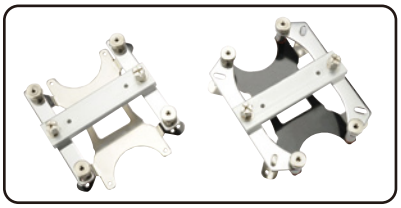

Universal bracket



High thermal
conductivity grease

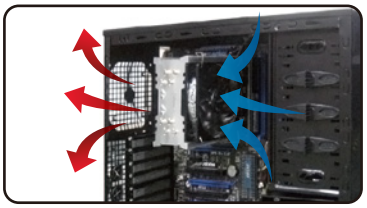

Application view

ENERMAX

ETS-T40-White Cluster

Your satisfaction, Our priority.

Specifications

Compatible Socket	Intel® LGA 775/1150/1155/1156/1366/2011, AMD® AM2/AM2+/AM3/AM3+/FM1/FM2
Overall Dimension	139(L) x 93(W) x 160(H) mm
Heat Sink Dimension	139(L) x 70(W) x 160(H) mm
Weight	610 g
Heat Pipe	4 x Ø6 mm
Material	Copper Heat Pipes / Aluminum Fins
Thermal Resistance	0.085°C/W
Thermal Grease	Dow Corning® TC-5121

Dimension

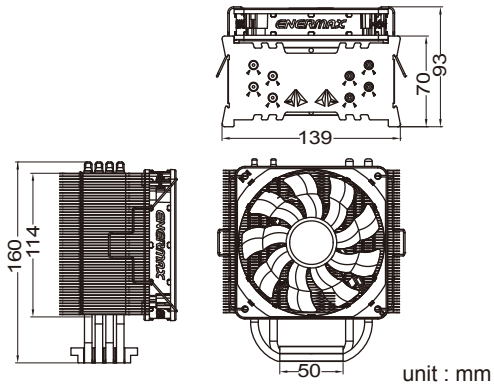

unit : mm

Model	ETS-T40-W



Fan Dimension	120 x 120 x 25 mm
Fan Speed	800 ~ 1500/1800/2200 RPM
Air Flow	37.57 ~ 71.3/86.7/105.9 CFM 63.9 ~ 121.1/147.3/180.0 m^3/h
Static Pressure	0.7 ~ 1.7/2.4/3.6 mmH_2O
Rated Voltage	12V
Bearing Type	Twister Bearing
MTBF	100,000 hours
Noise	17.3 ~ 24.3/28.3/31.2 dBA
Connector	4 pin PWM connector
LED	4 x White LEDs

Package Contents

CPU cooler	x1	Nut for bracket mount	x4
Fan	x1	Pressure mounting plate	x1
Back plate	x1	Nut for pressure mounting plate	x2
Plastic washer	x4	Angled wrench	x1
Screw pillar	x4	Fan bracket	x4
Intel 2011 screw pillar	x4	Vibration-absorbing rubber	x8
Bracket mount for Intel	x2	Thermal grease	x1
Bracket mount for AMD	x2	Installation guide	x1

Made in Taiwan Z385 N4251

ENERMAX

©2013 Enermax Technology Corporation. All rights reserved. All trademarks are the property of their respective owners. Images are for illustration purposes only.

Mar. 2013