T.B.APOLLISH

UCTA18A

Your satisfaction, Our priority

T.B.APOLLISH









UCTA18A-R

UCTA18A-BL

Features

- 18/20cm giant fan for better cooling performance
- Compatible with 18cm and 20cm mounting holes
- Shift Speed Control providing 3 cooling modes
- Patented Circular Type LED fan with up to 18 diodes
- Vortex frame design concentrating airflow to cool hotspot
- Focus blades design centering the light to increase brightness
- Turbine blades for high-pressure airflow



18 & 20cm Mounting Holes

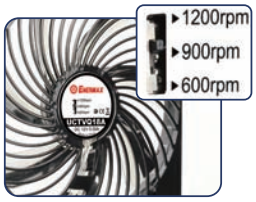

Shift Speed Control



Vortex Frame Design

Dimension

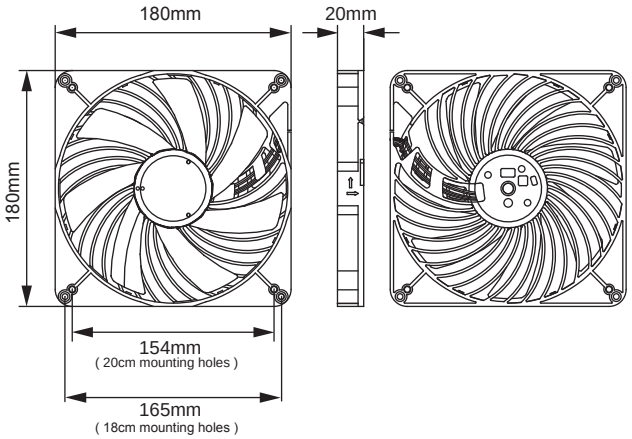

Compatible with Enermax Fulmo, Fulmo GT,
Fulmo ST(ECA3270B), Ostrog GT, Hoplite, Coenus.

Specifications

	Ultra Silent Mode	Silent Mode	Performance Mode
Dimension	180 x 180 x 20 mm	180 x 180 x 20 mm	180 x 180 x 20 mm
Speed (RPM)	600	900	1200
Air Flow (m^3/h)	116.55	174.81	209.77
Air Flow (CFM)	68.60	102.89	123.47
Static Pressure (mm-H_2O)	0.895	1.512	2.240
Noise (dBA)	15	18	20
Rated Voltage (V)	12	12	12
Input Current (A)	0.25	0.30	0.50
Input Power (W)	3	3.6	6
MTBF (hour)	50,000	50,000	50,000
Connector	1 x 3 pin connector		1 x 4 pin fan power adaptor

ENERMAX

© 2012 ENERMAX Technology Corporation. All rights reserved. Specifications are subject to change without prior notice. Actual products and accessories may differ from illustrations. Omissions and printing errors excepted. Content of delivery might differ in different countries or areas.Some trademarks may be claimed as the property of others.